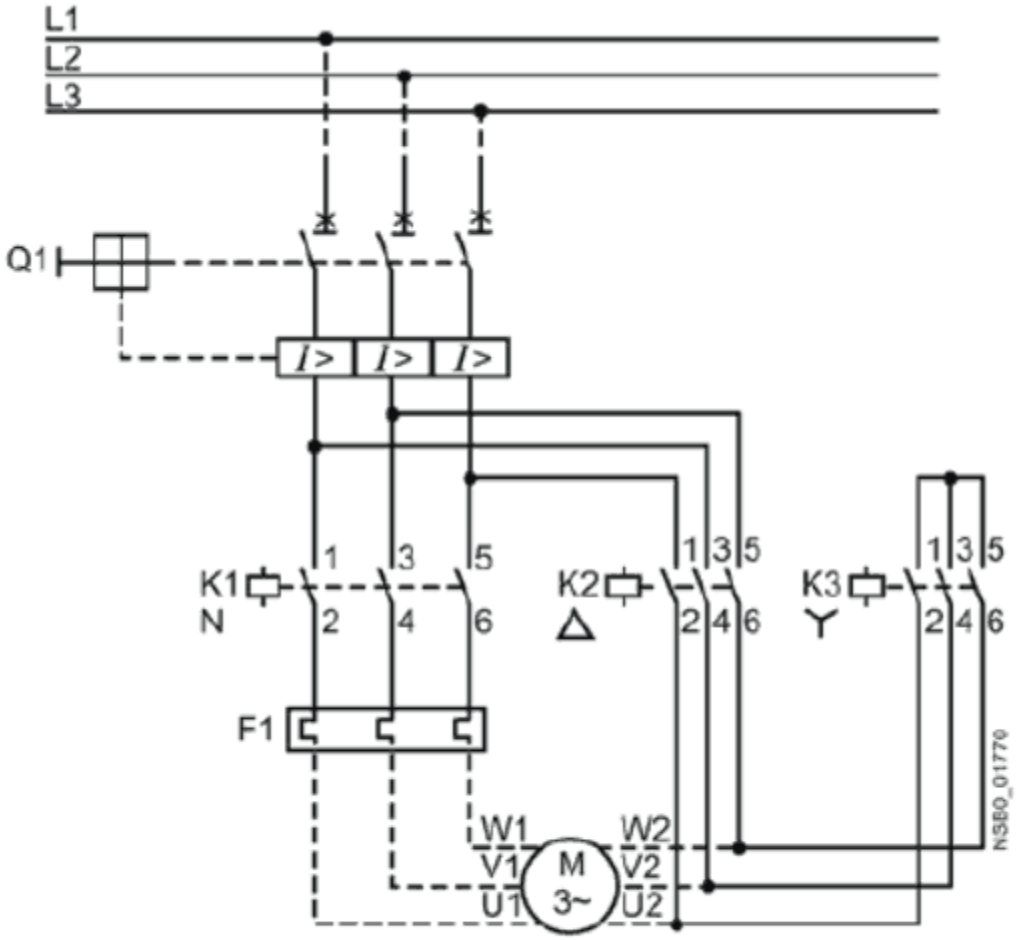

Circuit diagram main circuit for ⅄△ circuit

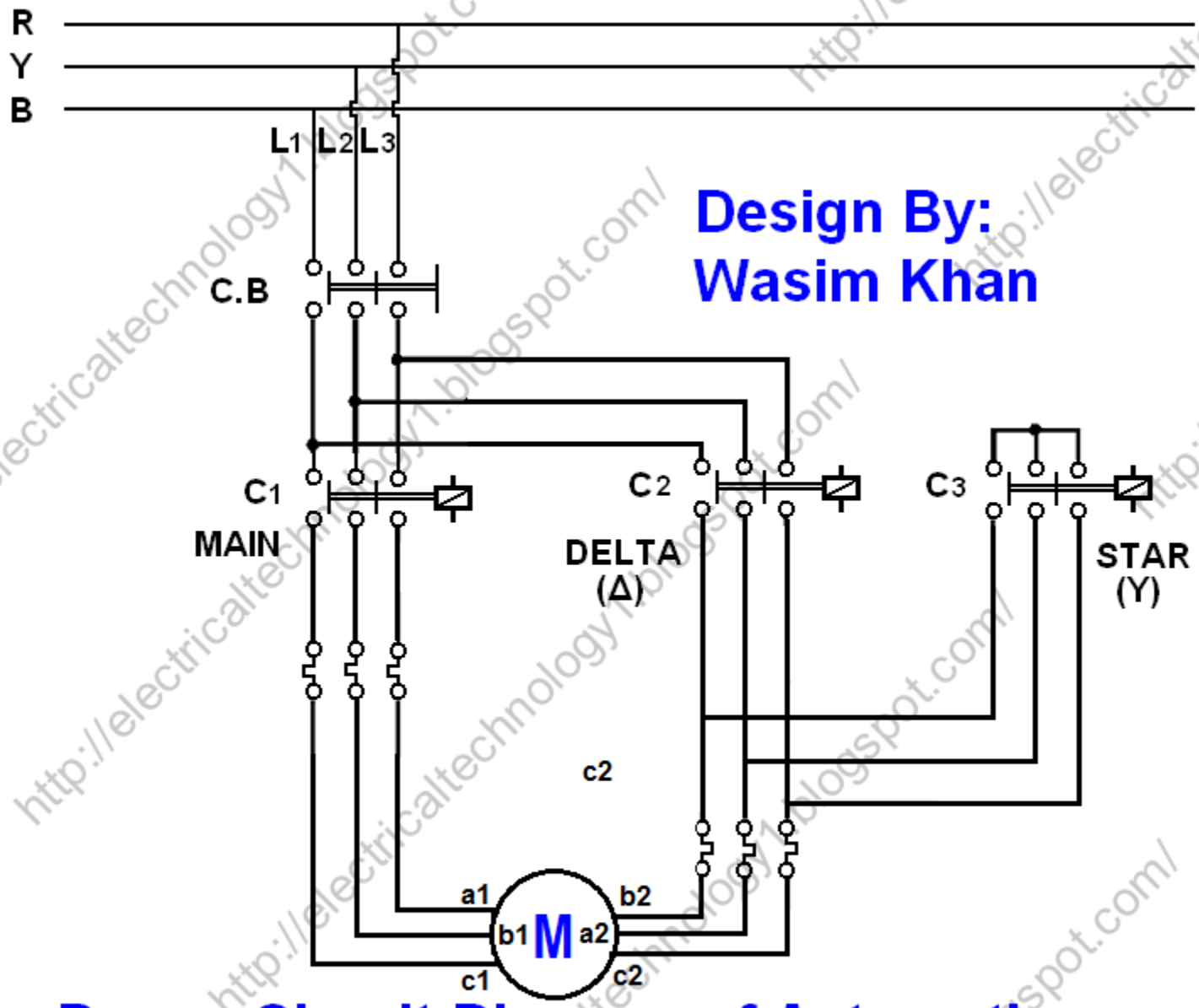

Power Circuit Diagram of Automatic Star-Delta (Y-Δ) Starter for 3-phase Motor

http://electricaltechnology1.blogspot.com/

FORWARD REVERSE 3 PHASE AC MOTOR CONTROL

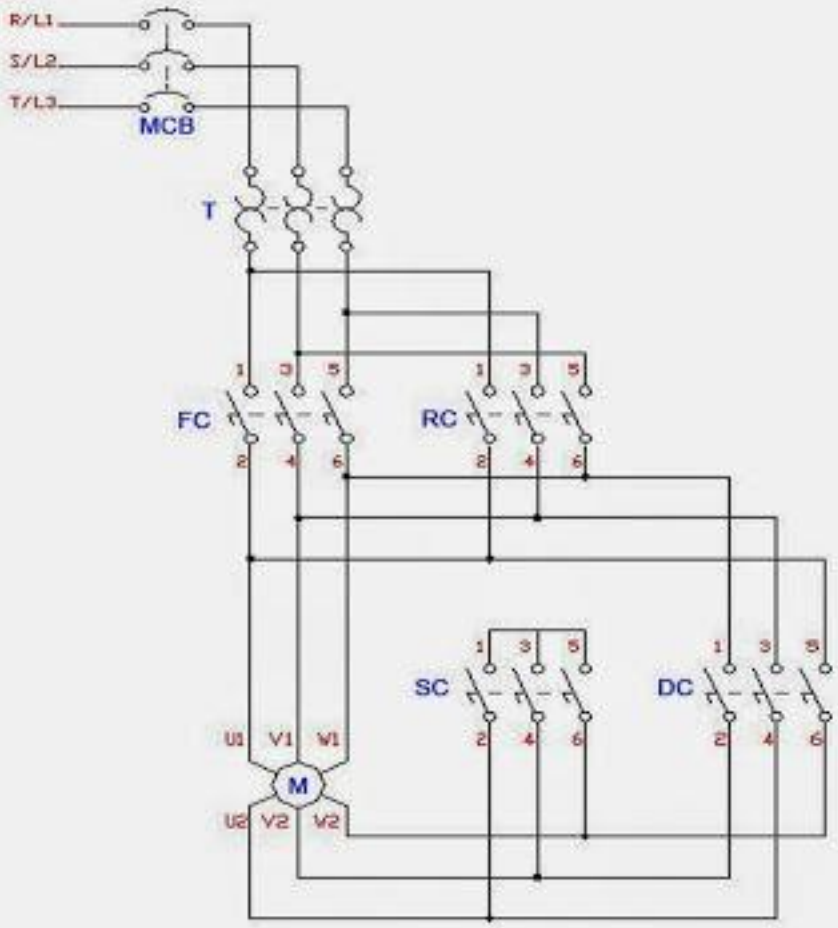

Main Circuit

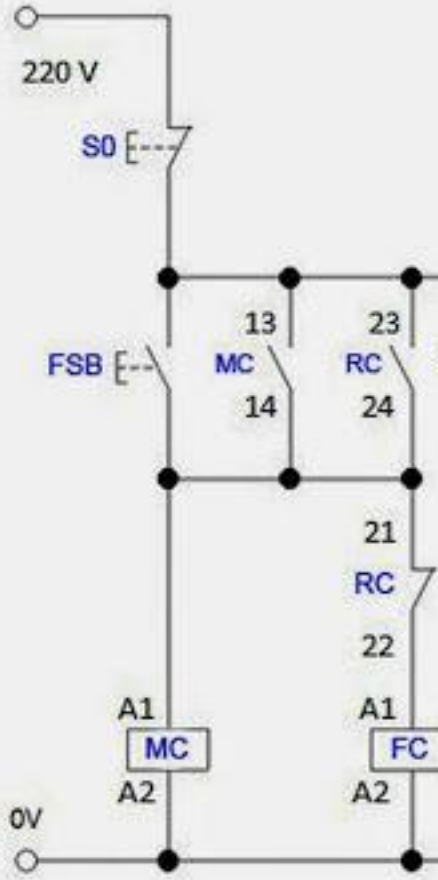

Control Circu

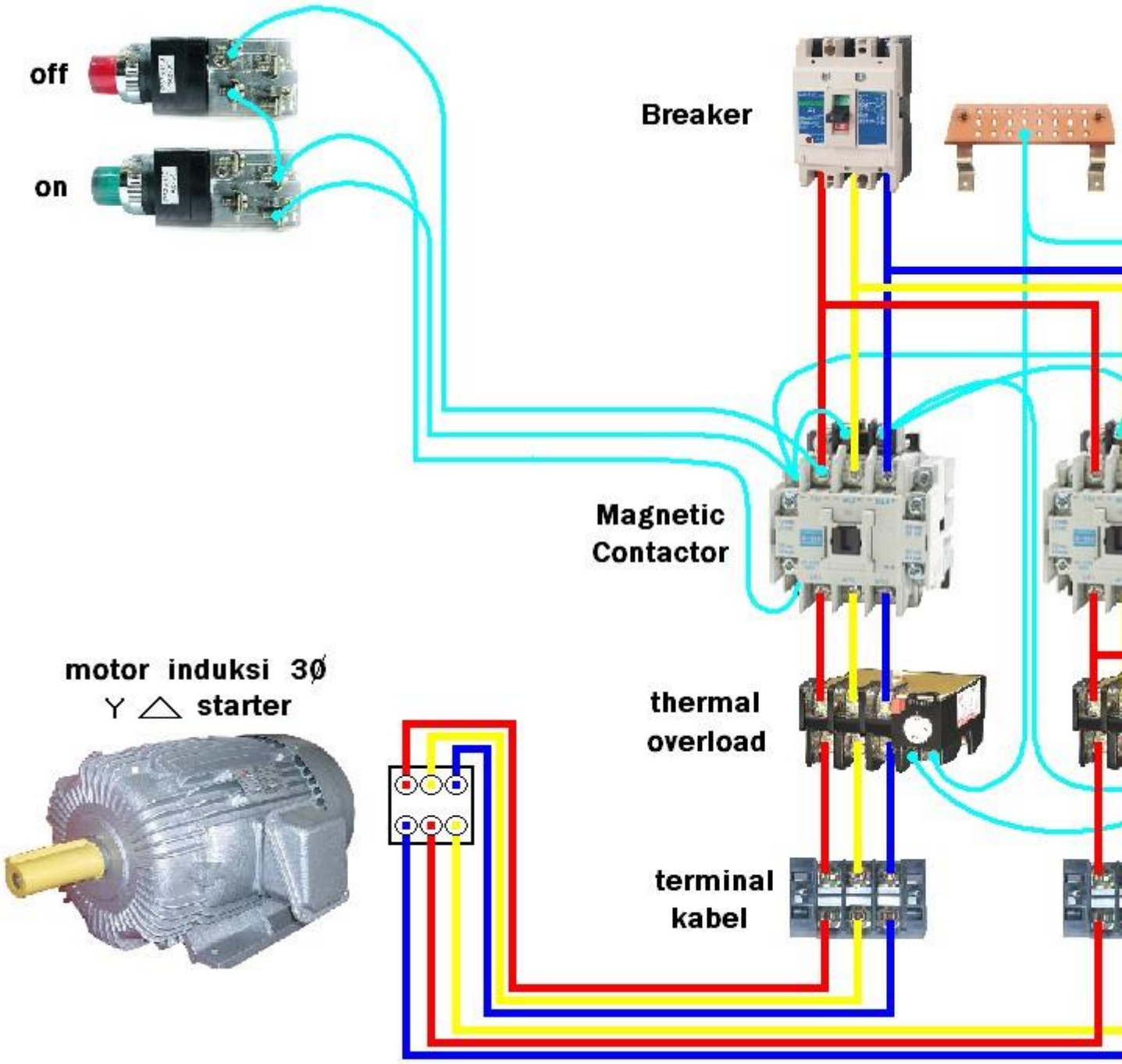
off
on
Breaker
Magnetic
Contactor
motor induksi 3Ø
Y △ starter
thermal
overload
terminal
kabel

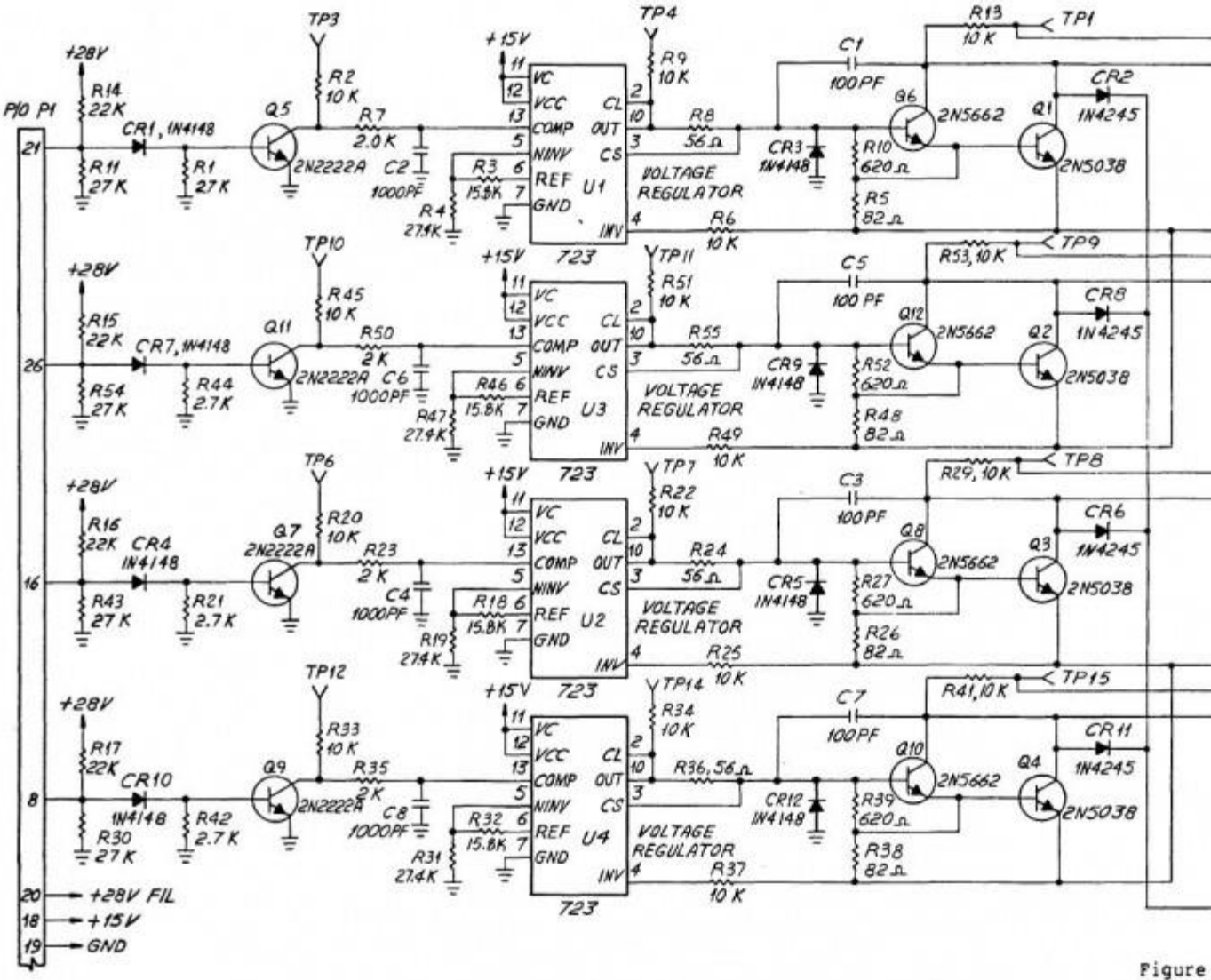

Figure
A2 Sche

Source : wiringdiagramshop.today

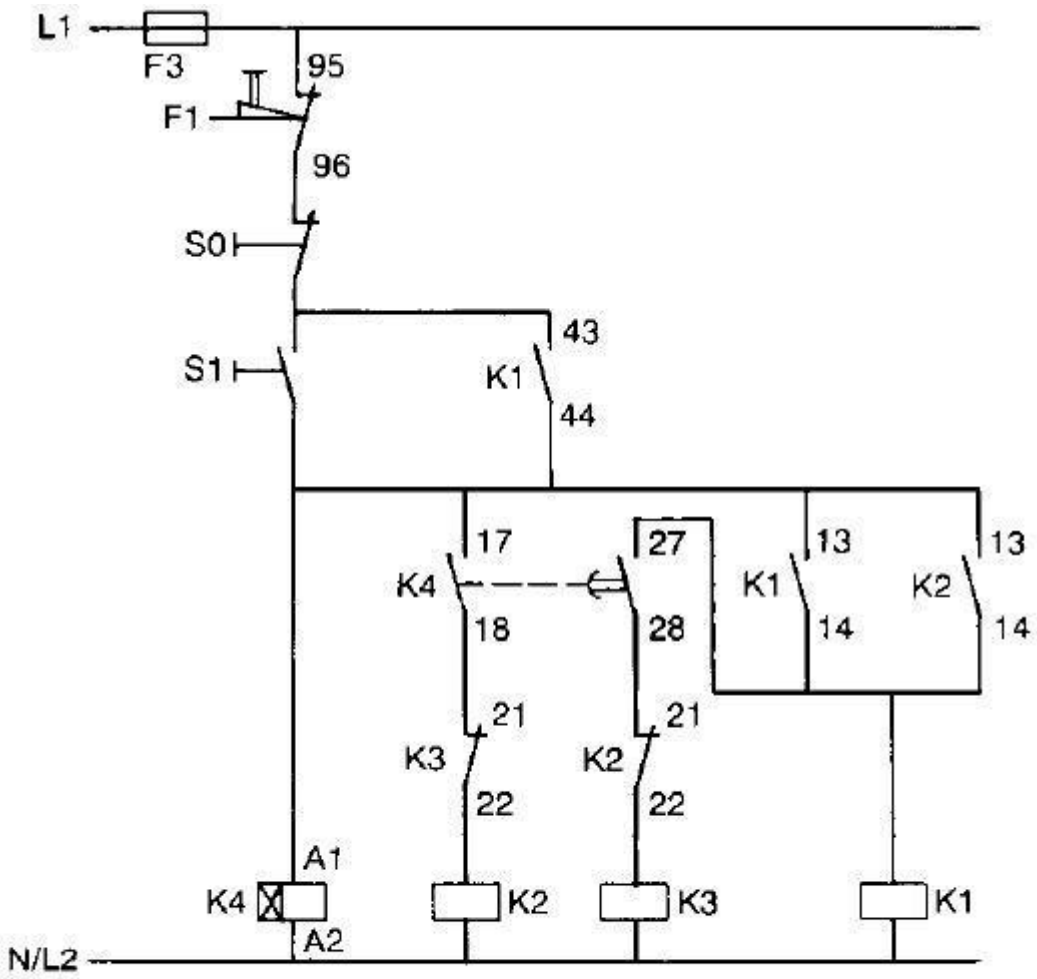

Control circuit for push button control (momentary command)

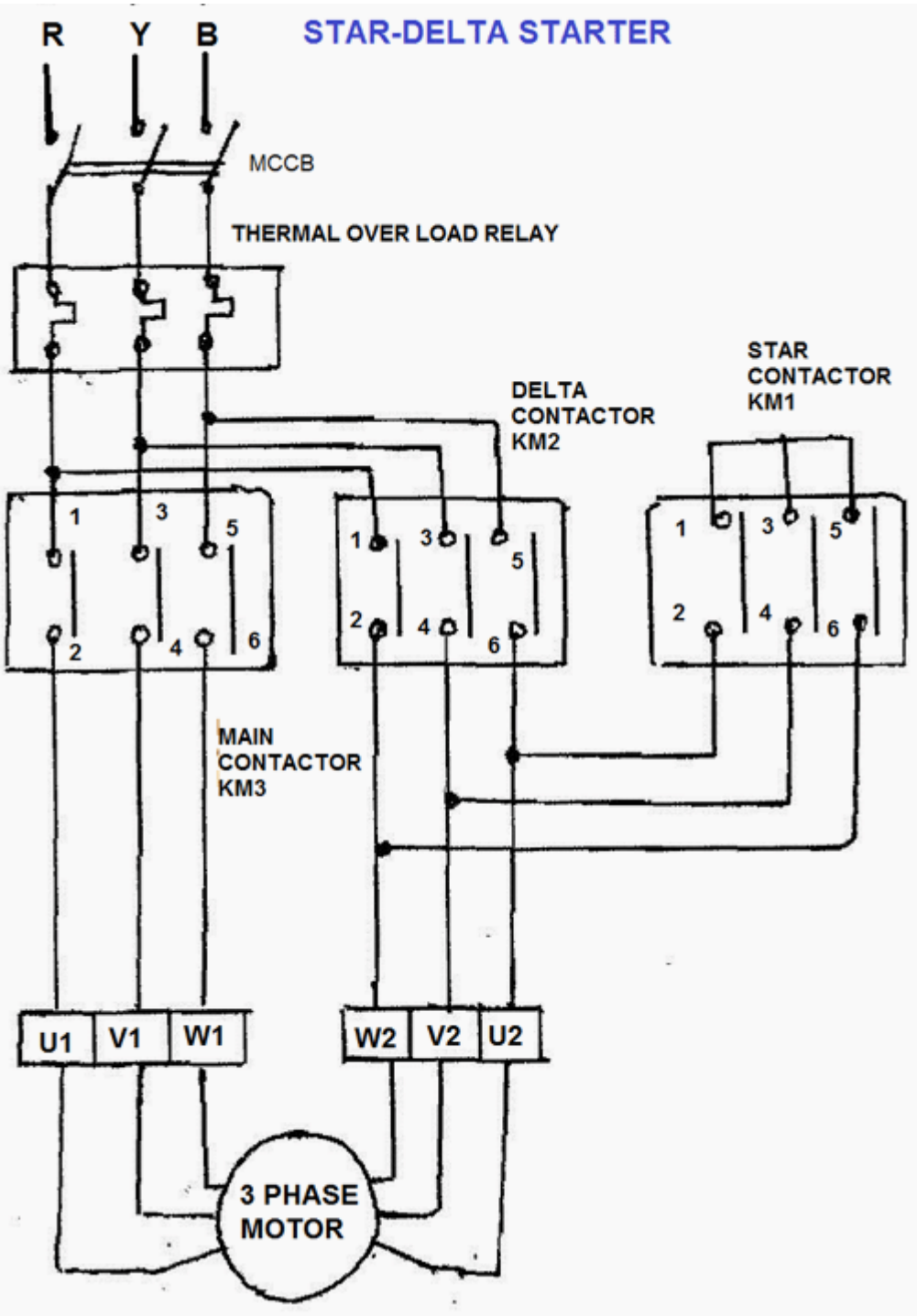
STAR-DELTA STARTER
R
Y
B
MCCB
THERMAL OVER LOAD RELAY
STAR
CONTACTOR
KM1
DELTA
CONTACTOR
KM2
MAIN
CONTACTOR
KM3
U1
V1
W1
W2
V2
U2
3 PHASE
MOTOR

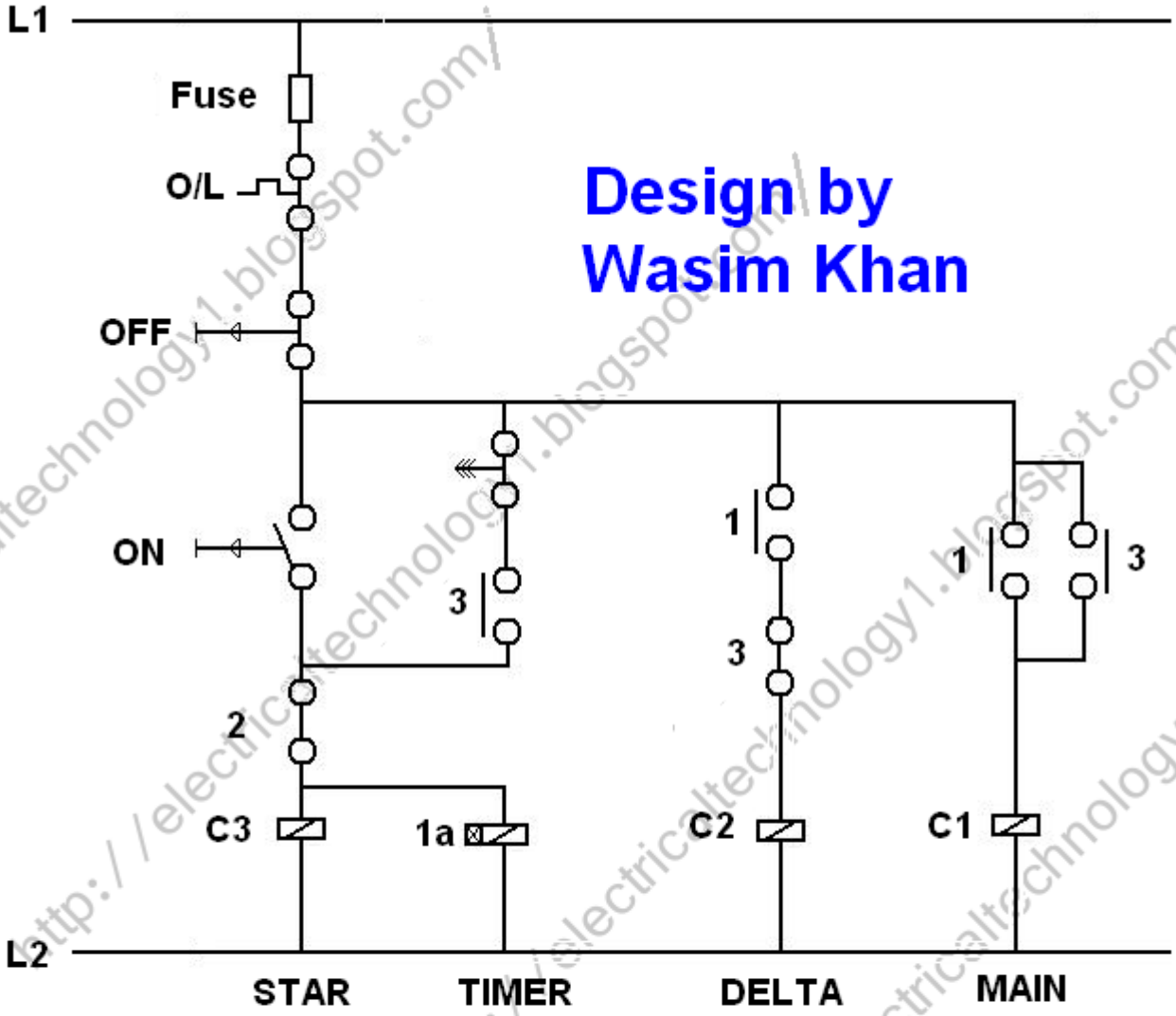

Design by
Wasim Khan

http://electricaltechnology1.blogspot.com/

Control Circuit Diagram of Automatic Star Delta (Y-Δ) starter with Timer for 3-Phase Motor.

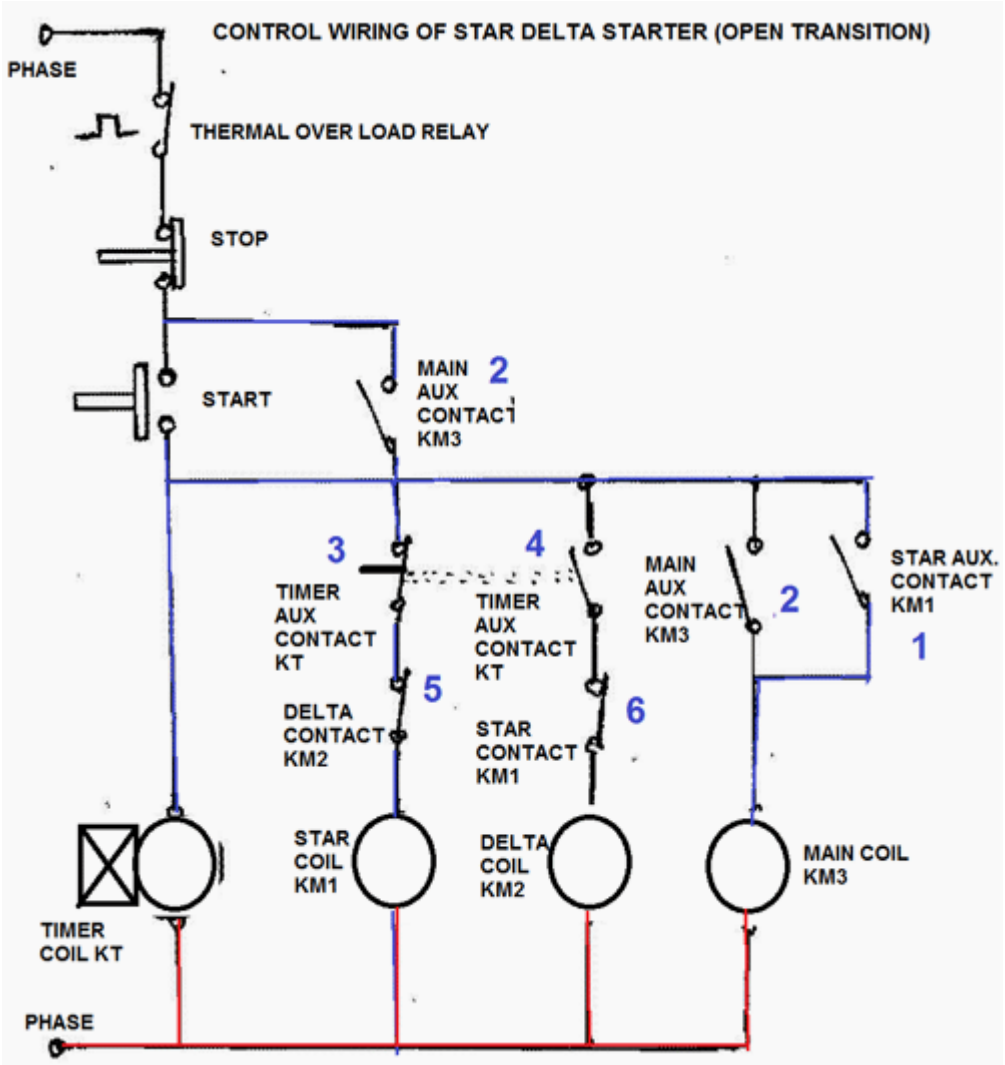
CONTROL WIRING OF STAR DELTA STARTER (OPEN TRANSITION)
PHASE
THERMAL OVER LOAD RELAY
STOP
START
MAIN AUX CONTACT KM3
2
3
TIMER AUX CONTACT KT
4
TIMER AUX CONTACT KT
MAIN AUX CONTACT KM3
2
STAR AUX. CONTACT KM1
1
5
DELTA CONTACT KM2
6
STAR CONTACT KM1
TIMER COIL KT
STAR COIL KM1
DELTA COIL KM2
MAIN COIL KM3
PHASE